IP-COM

Quick Installation Guide

AC1200 Enterprise Mesh WiFi System
EW9

Package contents

- EW9 x 1
- Bracket x 1
- Ethernet cable x 1
- Plastic strap x 2
- Screw x 4
- Expansion bolt x 4
- Expansion nut x 4
- Power adapter x 1
- Quick installation guide x 1

If any item is missing, or damaged, please keep the original packaging and contact the local reseller or distributor immediately.
For product or function details, please go to http://www.ip-com.com.cn to download the user guide.

Getting to know your device

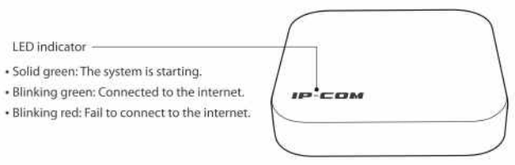

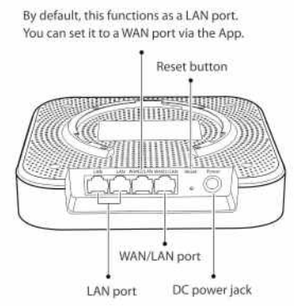

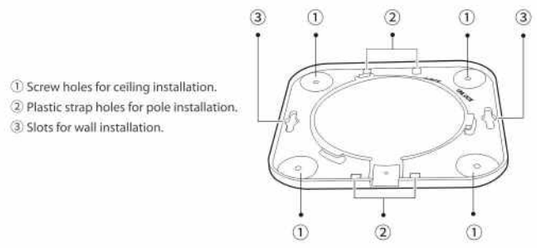

I. Setting up access to the internet

❶ Download the **IP-COM WiFi** App onto your mobile device by searching for **IP-COM WiFi** in the App Store or Google Play or by scanning the QR code. Then, install the App.

❷ Power off your modem, and remove and reinstall its battery (if any).
❸ Use the included Ethernet cable to connect a LAN port of your modem or the Ethernet jack to the WAN1/LAN port of EW9.
❹ Power on your modem.
❺ Power on the EW9. Its LED indicator lights solid green. Wait for about 40 seconds, EW9 completes startup when its LED indicator blinks green or red.

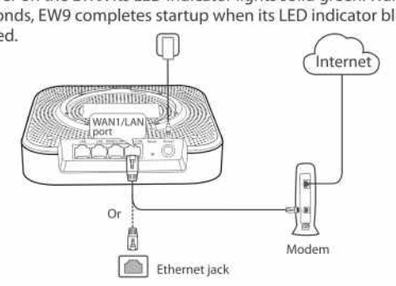

❻ Go to the WiFi network list on your mobile device, select the SSID of the EW9. The default SSID can be found at the bottom label of the device. By default, it has no password.

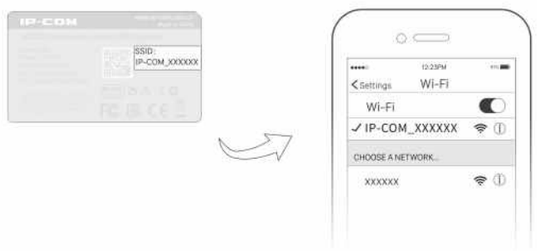

❼ Run the **IP-COM WiFi** App, and complete your settings following the on-screen instructions. After the EW9 is connected to the internet, its LED indicator blinks **green.**

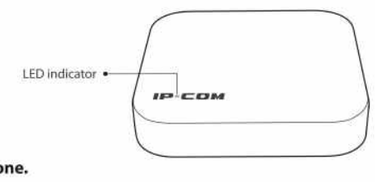

Done.

- Wired devices: Connect your wired devices to the LAN ports of your EW9.
- Wireless devices: Connect wireless devices to your WiFi network using the SSID and the WiFi password you set.
- If you want to manage the network anytime, anywhere, then access the App, tap and login to your account.

II. Installing EW9

Tips: You may need a rubber hammer, a marker, a hammer drill, a drill bit, a screwdriver, and a ladder for the installation. Please prepare them yourself.

You are provided with multiple installation options, including desktop, ceiling, wall, and pole installations.
Please choose the appropriate option as required. This guide provides ceiling and pole installations as examples.

■ Ceiling installation

❶ Position the bracket on the celling and mark screw holes on the celling with your marker.

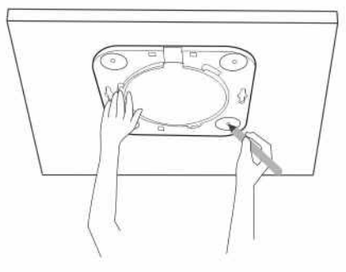

❷ Drill holes in the marked positions using the hammer drill.

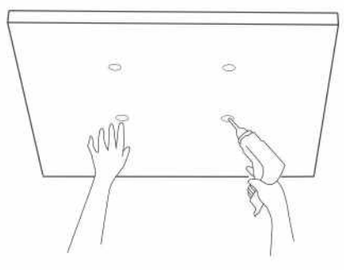

Tips: **Option A** applies to general situations. However, please choose **option B** if the strength of your ceiling material is weak, such as drywall.

❸ **Option A** Use the rubber hammer to knock the expansion bolts into the holes you drilled. Then use the screwdriver to drive screws into expansion bolts so as to fasten the bracket.

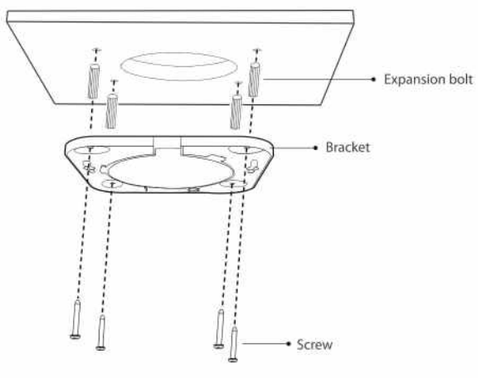

❸ **Option B** Use screws and expansion nuts to fasten the bracket onto the ceiling.

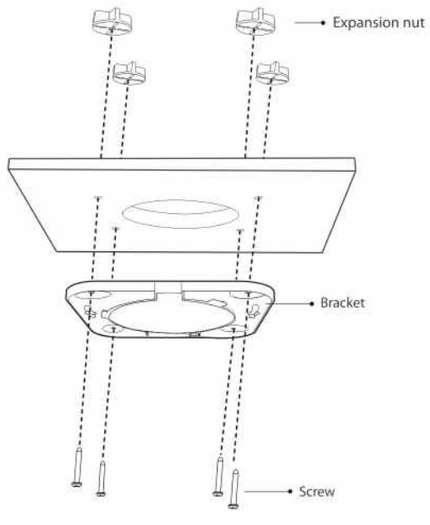

❹ Insert the hooks of the EW9 into the slots of the bracket, and rotate the EW9 to lock it firmly.

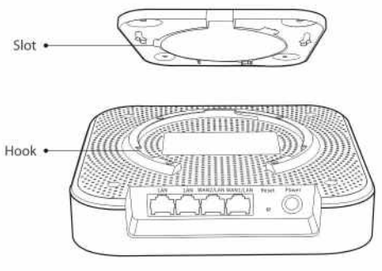

■ Pole installation

❶ Thread the two plastic straps across the holes on the bracket respectively. Attach the bracket onto the pole, and tighten the plastic straps to fix the bracket.

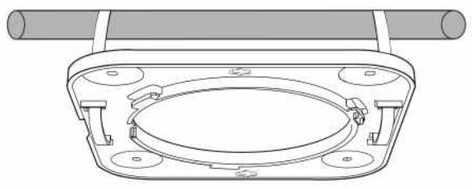

❷ Insert the hooks of the EW9 into the slots of the bracket, and rotate the EW9 to lock it firmly.

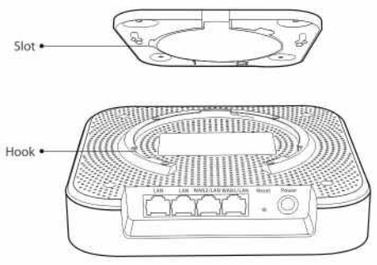

Appendix A FAQ

Q1. The LED indicator of the EW9 blinks red. What should I do?

A1: If it functions as the primary Mesh WiFi node, try the following solutions:

— Check if the WAN port of the node is properly connected.

— Run the **IP-COM WiFi** App, and follow the on-screen instructions to solve.

If it functions as a secondary Mesh WiFi node, try the following solutions:

— Ensure that the LED indicator of the primary Mesh WiFi node is blinking green.

— Move the secondary Mesh WiFi node closer to another one which has a blinking green LED indicator. Wait until the LED indicator of the node that blinks red starts to blink green.

Tips:
The primary Mesh WiFi node: The EW9 that connects to the internet via an Ethernet cable.
The secondary Mesh WiFi node: A node used to expand the WiFi network of the primary Mesh WiFi node.

Q2: How to restore EW9 to factory settings?

A2: With the EW9 powered on, hold the Reset button down using a paper clip for about 8 seconds. Release when the LED indicator lights solid on. The EW9 restarts automatically after being reset.

Q3: How to authorize another person to manage my WiFi network?

A3: Run the **IP-COM WiFi** App, tap **Settings**, **Account Authorization**, and **Add an account**. Enter an account registered on the **IP-COM WiFi** App, and tap **OK.**

Appendix B How many Mesh devices do I need?

Scenarios	Solutions
3,500 sq. ft with 60 devices	1 × EW9 + 1 × EP9
5,000 sq. ft with 80 devices	1 × EW9 + 2 × EP9
6,000 sq. ft with 100 devices	1 × EW9 + 3 × EP9

Appendix C Specifications

Item	Parameter
Wireless band	2.4 GHz, 5 GHz
Data rate	300Mbps + 867Mbps
Networking technology	True Mesh
Antenna	4 x 4 dBi omni-directional antenna
Jack and port	1 x DC IN jack 4 x 10/100/1000 Mbps auto-negotiation RJ45 port
WAN port	Supports up to 2 WAN ports
Button	1 x Reset
Dimension (L×W×H)	170 mm×170 mm×36 mm
Installation option	Wall, Ceiling, Pole and Desktop

CE Mark Warning
This is a Class B product. In a domestic environment, this product may cause radio interference, in which case the user may be required to take adequate measures.
The mains plug is used as disconnect device; the disconnect deviceshall remain readily operable.
Operations in the 5.15-5.25GHz band are restricted to indoor use only.
This equipment should be installed and operated with a minimum distance 20cm between the device and your body.
NOTE: (1) The manufacturer is not responsible for any radio or TV interference caused by unauthorized modifications to this equipment.
(2) To avoid unnecessary radiation interference, it is recommended to use a shielded RJ45 cable.

Declaration of Conformity
Hereby, SHENZHEN IP-COM Networks Co., Ltd. declares that the radio equipment type EW9 is in compliance with Directive 2014/53/EU.
The full text of the EU declaration of conformity is available at the following internet address: http://ip-com.com.cn/en/ce.html
Operating Frequency:
2.4G: EU/2412-2472MHz (CH1-CH13)
5G: EU/5150-5250MHz (CH36-CH48)
EIRP Power (Max.):
2.4GHz: 19.97dBm
5GHz: 22.97dBm
Software Version: V15.11.0.X

Operating Environment
Temperature: 0°C-40°C Humidity: (10 - 90) %RH, non-condensing

FCC Statement
This equipment has been tested and found to comply with the limits for a Class B digital device, pursuant to Part 15 of the FCC Rules. These limits are designed to provide reasonable protection against harmful interference in a residential installation. This equipment generates, uses and can radiate radio frequency energy and, if not installed and used in accordance with the instructions, may cause harmful interference to radio communications. However, there is no guarantee that interference will not occur in a particular installation. If this equipment does cause harmful interference to radio or television reception, which can be determined by turning the equipment off and on, the user is encouraged to try to correct the interference by one or more of the following measures:
— Reorient or relocate the receiving antenna.
— Increase the separation between the equipment and receiver.
— Connect the equipment into an outlet on a circuit different from that to which the receiver is connected.
— Consult the dealer or an experienced radio/TV technician for help.
The device is for indoor usage only.
This device complies with Part 15 of the FCC Rules. Operation is subject to the following two conditions: (1) this device may not cause harmful interference, and (2) this device must accept any interference received, including interference that may cause undesired operation.

This device complies with FCC radiation exposure limits set forth for an uncontrolled environment and it also complies with Part 15 of the FCC RF Rules.

This equipment should be installed and operated with minimum distance 20cm between the radiator & your body.

Caution:
Any changes or modifications not expressly approved by the party responsible for compliance could void the user's authority to operate this equipment.
This transmitter must not be co-located or operating in conjunction with any other antenna or transmitter.

Operating frequency: 2412-2462MHz, 5150-5250MHz, 5725-5850MHz

NOTE: (1) The manufacturer is not responsible for any radio or TV interference caused by unauthorized modifications to this equipment. (2) To avoid unnecessary radiation interference, it is recommended to use a shielded RJ45 cable.

Caution:
Adapter Model: BN036-A12012E / BN036-A12012B
Input: 100-240V AC 50/60Hz 0.4A
Output: 12V DC, 1A
Manufacturer: SHENZHEN HEWEISHUN NETWORK TECHNOLOGY CO., LTD.
⎓: DC Voltage

RECYCLING

This product bears the selective sorting symbol for Waste electrical and electronic equipment (WEEE). This means that this product must be handled pursuant to European directive 2012/19/EU in order to be recycled or dismantled to minimize its impact on the environment.
User has the choice to give his product to a competent recycling organization or to the retailer when he buys new electrical or electronic equipment.

For EU/EFTA, this product can be used in the following countries:

BE	BG	CZ	DK	DE	EE	IE
EL	ES	FR	HR	IT	CY	LV
LT	LU	HU	MT	NL	AT	PL
PT	RO	SI	SK	FI	SE	UK

Technical Support
Address: Room 101, Unit A, First Floor, Tower E3, NO.1001, Zhongshanyuan Road, Nanshan District, Shenzhen, China. 518052
Tel: (86755) 2765 3089
Email: info@ip-com.com.cn
Website: http://www.ip-com.com.cn

Copyright
© 2018 I IP-COM Networks Co., Ltd. All rights reserved.
This documentation (including pictures, images, and product specifications, etc.) is for reference only. To improve internal design, operational function, and/or reliability, IP-COM reserves the right to make changes to the products described in this document without obligation to notify any person or organization of such revisions or changes.