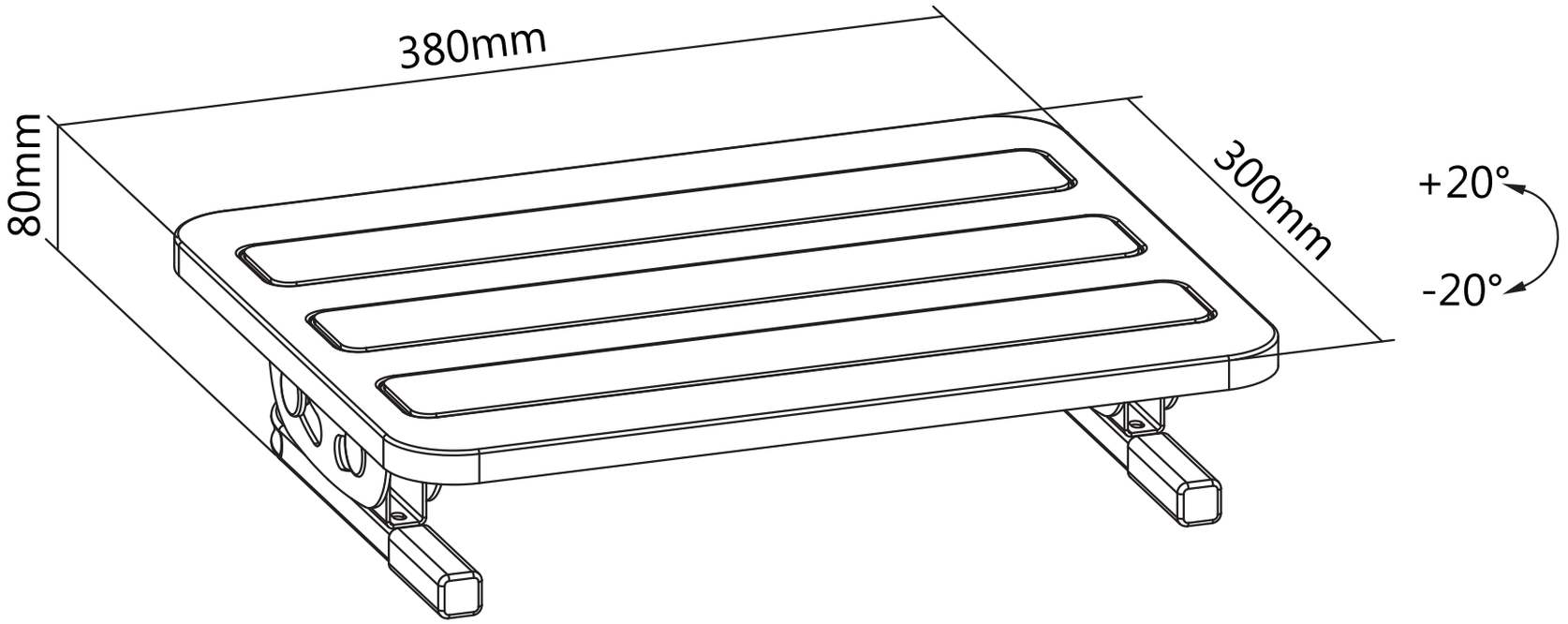
380mm
80mm
300mm
+20°
-20°