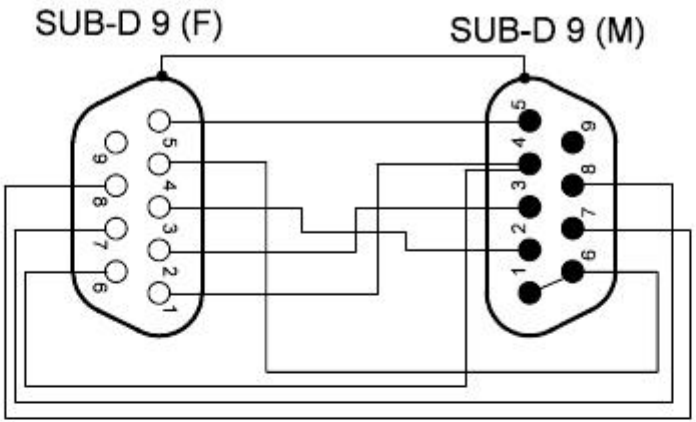

1 -- 4
2 -- 3
3 -- 2
4 -- 1+6
5 -- 5
6 -- 4
7 -- 8
8 -- 7
G -- G

- *gender changer SUB-D; bulk*
- *null-modem adaptor 9 pin*
- *generate a null-modem cable base on a sub-D cable*
- *usefull for datatransfer between two PCs by the seriell ports*
- *RoHS-compliant*